

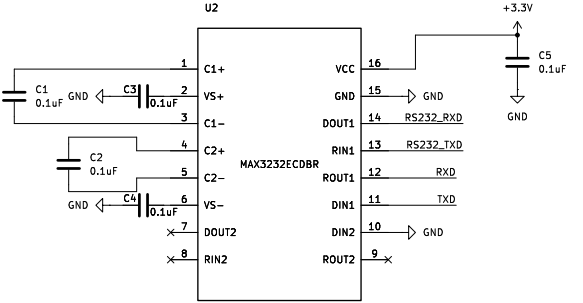

MAX3232 pin 14, T1OUT – RJ45 pin 3 – cable – DB-9 pin 2, PC RXD

MAX3232 pin 13, R1IN – RJ45 pin 5 – cable – DB-9 pin 3, PC TXD

MAX3232 pin 15, GND – RJ45 pin 4 – cable – DB-9 pin 5, signal GND